Bacharach MGS 150 R410a Sensor

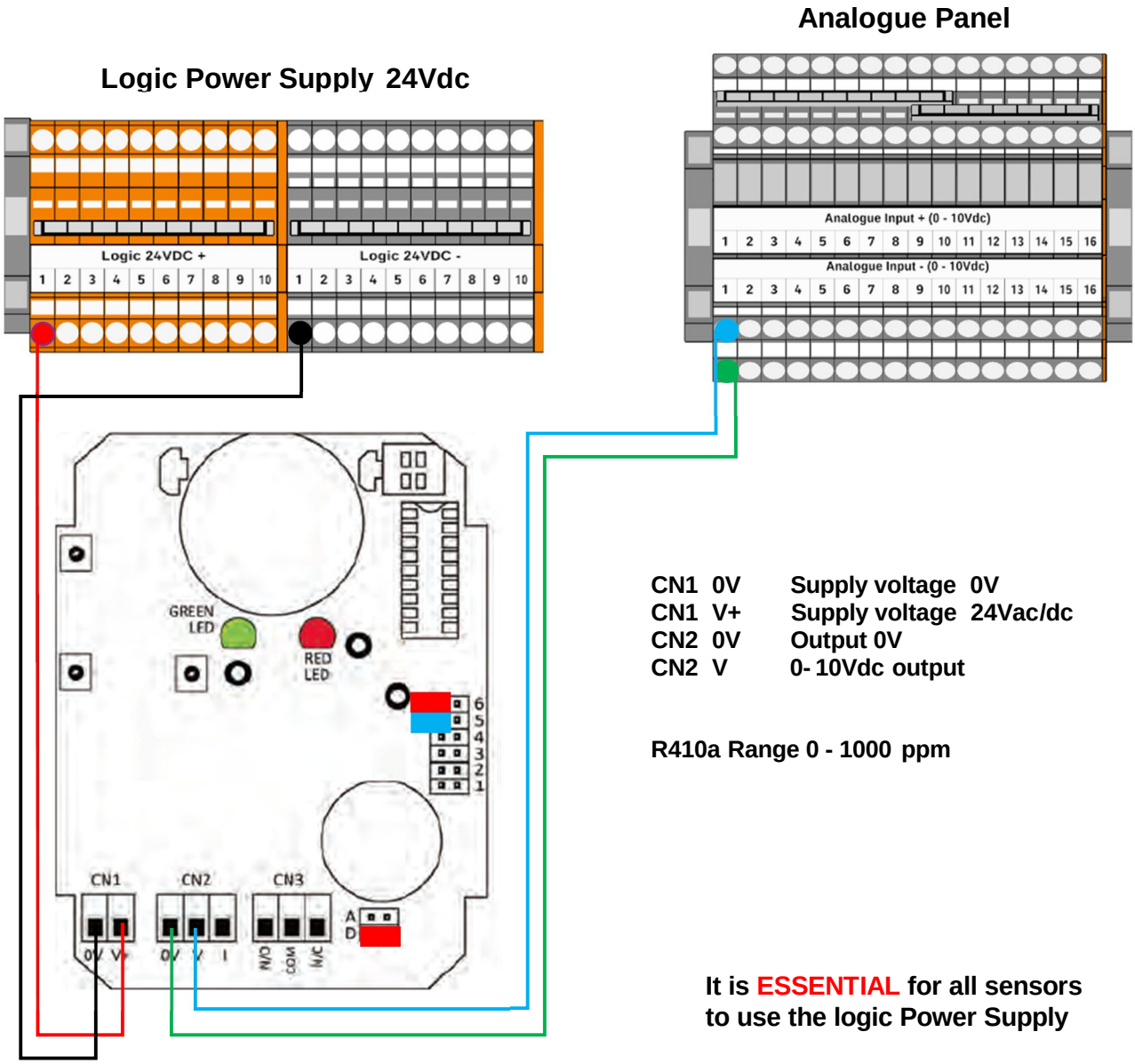

CN1 0V Supply voltage 0V
CN1 V+ Supply voltage 24Vac/dc
CN2 0V Output 0V
CN2 V 0- 10Vdc output

R410a Range 0 - 1000 ppm

It is ESSENTIAL for all sensors to use the logic Power Supply

Scaling Analog Input is done within our software

Title	MGS 150 R410a Sensor Wiring Diagram		
Author	SJ Shoubridge		
Date	01/07/2018	Sheet	1
Revision			

© 2018 Alpha Air Distribution Ltd